P510/1
Physics
Paper 1
July – August 2025
2 ½ Hours

UGANDA MUSLIM TEACHERS' ASSOCIATION

UMTA JOINT MOCK EXAMINATIONS – 2025

UGANDA ADVANCED CERTIFICATE OF EDUCATION

Physics

Paper 1

2 Hours 30 Minutes

INSTRUCTIONS TO CANDIDATES

- *Answer **five** questions including at least **one**, but not more than **two** from each of the Sections **A**, **B** and **C**.*
- *Any additional question(s) answered will not be marked.*

Assume where necessary:

– *Acceleration due to gravity, g*	$= 9.81ms^{-2}$
– *Electron charge, ℓ*	$= 1.6x10^{-19}c.$
– *Electron mass*	$= 9.11x10^{-31}kg.$
– *Mass of earth*	$= 5.97x10^{24}kg.$
– *Plank's constant h*	$= 6.6x10^{-34}Js$
– *Stefan's – Boltzmann's constant σ*	$= 5.67x10^{-8}Wm^{-2}K^{-4}$
– *Radius of earth*	$= 6.4x10^{6}m.$
– *Speed of light in vacuum, C*	$= 3.0x10^{8}ms^{-1}.$
– *Universal gravitational constant G*	$= 6.67x10^{-11}Nm^{2}kg^{-2}$
– *Specific heat capacity of water*	$= 4200Jkg^{-1}K^{-1}$
– *Density of water*	$= 1000kgm^{-3}$
– *Gas constant, R*	$= 8.31Jmol^{-1}k^{-1}$
– *Avogadro's number N_A*	$= 6.02x10^{23}mol^{-1}$
– *Specific latent heat of vaporization of water*	$= 2.26x10^{6}Jkg^{-1}$
– *Radius of earth's orbit about the sun*	$= 1.5x10^{11}m.$
– *Wien's displacement constant*	$= 2.9 \times 10^{-3}mk$
– *Radius of the sun*	$= 7 \times 10^{8}m$
– *Specific latent heat of fusion of ice*	$= 3.34 \times 10^{5}Jkg^{-1}$

© UMTA Joint Mocks 2025

CamScanner

SECTION A

1. (a) Define the terms;
   (i) Linear momentum. (01 mark)
   (ii) Uniform acceleration. (01 mark)

   (b) Two bodies **P** and **Q** of masses $\mathbf{m_1}$ and $\mathbf{m_2}$ moving with velocities $\mathbf{U_1}$ and $\mathbf{U_2}$ respectively in the same straight line suffer a perfectly elastic collision in one dimension. Derive the expression for the velocity of **P** after collision. (05 marks)

   (c) A simple pendulum of length **2m** has a bob of mass **100g**. It is displaced from its mean position, **A** to position **B** so that the string makes an angle of $\mathbf{45^0}$ with the vertical and then released. Calculate the velocity of the bob when in position, **C** when it makes an angle of $\mathbf{30^0}$ with the vertical. (04 marks)

   (d) (i) State **two** similarities between viscous force and solid friction. (02 marks)
   (ii) Use molecular theory of matter to explain the origin of solid friction. (03 marks)
   (iii) Describe an experiment to measure the coefficient of kinetic friction between **two** solid surfaces. (04 marks)

2. (a) Define;
   (i) Moment of a couple. (01 mark)
   (ii) Uniform body. (01 mark)

   (b) (i) State **two** applications of a couple. (02 marks)

   (ii) State the essential conditions for a body in mechanical equilibrium. (02 marks)

   (c) A uniform ladder, **AB** of length **10m** and weight **200N** rests on a rough ground at **A** and leans against a smooth wall at **B** at an angle of $\mathbf{60^0}$ to the horizontal. Painter of weight **500N** stands on the ladder $\mathbf{^1/_4}$ of the way from its lower end. If the ladder is at the point of slipping, find the;
   (i) Least coefficient of friction between the ladder and the ground. (05 marks)
   (ii) Resultant force acting on the lower end of the ladder. (03 marks)

   (d) (i) Explain why it is desirable to bank a road at corners. (02 marks)
   (ii) A bob of mass **m** attached to a light inextensible string of length **L**, rotates in a

CamScanner

horizontal circle of radius, **r** with constant angular velocity, **W**. If the string makes an angle θ with the vertical, show that its frequency of oscillation is given by;

$$f = \frac{1}{2\pi}\sqrt{\frac{g\tan\theta}{r}}.$$ (04 marks)

3. (a) Define;

(i) Surface energy. (01 mark)

(ii)Angle of contact. (01 mark)

(b) (i) Explain the effect of temperature on surface tension of a liquid. (03 marks)

(ii) With aid of a diagram, describe an experiment to determine surface tension of a liquid using capillary method. (05 marks)

(c) (i) Define coefficient of viscosity and state its dimensions. (03 marks)

(ii) Explain why lubricant oil should be of high viscosity. (02 marks)

(d) A liquid flows through a pipe of diameter **2mm** and length **10cm** under a pressure of **1 x 10^3 Pa**. If the coefficient of Viscosity of the liquid is **1.25 x 10^{-3} Pas**, Calculate the;

(i) rate of flow of the liquid. (03 marks)

(ii) speed of the liquid coming out of the pipe. (02 marks)

4. (a) (i) Define simple harmonic motion. (01 mark)

(ii) State **four** characteristics of simple harmonic motion. (02 marks)

(b) A body of mass **500g** hangs from a helical spring. The body is pulled down **25mm** from its equilibrium position and then released from rest. The frequency of oscillation is **0.60HZ.**

(i) Stating any assumptions made, show that it describes simple harmonic motion. (04 marks)

(ii) Calculate the force constant of the spring. (03 marks)

(iii) Calculate the total energy of the body. (02 marks)

CamScanner

(c) (i) What is meant by a parking orbit? (01 mark)

(ii) A satellite of mass **200kg** is launched above the earth's surface in a parking orbit. Calculate the height of the satellite above the earth's surface. (04 marks)

(iii) Explain why a satellite entering the earth's atmosphere at a high velocity may catch fire. (03 marks)

SECTION B

5. (a) (i) State **four** factors which control the rate of cooling of a body. (02 marks)

(ii) Describe how the cooling correction may be estimated in the determination of specific heat capacity of a poor conductor of heat by the method of mixtures. (06 marks)

(iii) Explain why cooling correction is not necessary when using continuous flow method? (02 marks)

(b) A vessel of heat capacity **200JK^{-1}** whose walls are thermally insulated contains **2.10kg** of water and **200g** of ice, all at **0^{0}C**. The outlet of a tube leading from a boiler in which water is boiling at **1** atmospheric pressure is inserted into the water.

(i) Find the amount of steam which must condense to raise the temperature of the system to **20^0 C**. (05 marks)

(ii) State any assumptions made in **(i)** above. (01 mark)

(c) (i) State **four** advantages of a thermo electric thermometer. (02 marks)

(ii) Briefly explain why a platinum resistance thermometer cannot be used to measure rapidly changing temperature. (02 marks)

6. (a) (i) What is meant by a reversible process? (01 mark)

(ii) State the conditions necessary for isothermal and diabatic processes to occur. (03 marks)

(b) Use the law of thermodynamics to explain why the bicycle pump becomes warm, when pumping up a tyre on the bicycle. (03 marks)

CamScanner

(c) An ideal gas having a temperature of **27°C**, volume **3 x 10^{-4} m^3** and pressure **80cm Hg** expands isothermally to double its volume. The gas is then compressed adiabatically to half its original volume. Finally, it undergoes an isobaric compression to its original temperature.

(i) Show the above process on a **P – V** diagram. (02 marks)

(ii) Calculate the final pressure and volume of the gas. (06 marks)

$$\left(\textit{Molar heat capacity at constant volume} = {}^{5}/_{2}\,R\right)$$

(d) (i) What is meant by Kinetic theory of gases? (01 mark)

(ii) Use Kinetic theory of gases to deduce Dalton's law of partial pressures. (04 marks)

7. (a) What is meant by;

(i) Thermal conductivity of a material? (01 mark)

(ii) Temperature radiation? (01 mark)

(b) (i) Explain why metals are better conductors of heat than glass? (03 marks)

(ii) With aid of a diagram, describe an experiment to determine thermal conductivity of a glass material. (07 marks)

(c) A wall of a building consists of two brick layers each of thickness **12.0cm** and between them there is a layer of air **3.0cm** thick. If the inner and outer temperatures of the building are **25°C** and **15°C** respectively, find the rate of heat flow through **1.0m²** of the wall. (05 marks)

(Thermal conductivities of brick and air are respectively **6.7Wm^{-1}K^{-1}** and **0.024Wm^{-1}K^{-1}**)

(d) (i) State Wien's displacement law. (01 mark)

(ii) The filament of an electric bulb of diameter **5.0 x 10^{-5}m** attains a temperature of **1600K** when the power supplied to it is **25W**. Find the length of the filament. (02 marks)

CamScanner

SECTION C

8. (a) (i) What are positive rays? (01 mark)

(ii) State **two** differences between positive rays and cathode rays. (02 marks)

(b) (i) Describe how a Bain bridge mass spectrometer can be used to measure the charge to mass ratio of ions. (06 marks)

(ii) State **one** limitation of the Bain bridge mass spectrometer. (01 mark)

(c) **Two** singly charged isotopes ^{35}Cl and ^{37}Cl of chlorine moving with speed $3.0 \times 10^5 ms^{-1}$ enter perpendicularly into a region of uniform magnetic field of **0.60T** which deflects them through 180^0 before they are traced on the photographic plate. Given mass of $^{35}Cl = 35$ U Mass of $^{37}Cl = 37$ U, Calculate;

(i) Linear separation of traces on the plate. (03 marks)

(ii) Difference in times spent by the **two** isotopes in the magnetic field. (03 marks)

(d) (i) Explain the physical processes involved at cut off wavelength of X – rays. (02 marks)

(iii) An X – ray tube operates at an accelerating voltage of **60KV** when electron beam current is **10m A**. Calculate the shortest wavelength of **x – rays** produced. (02 marks)

9. (a) State Rutherford's model of the atom. (02 marks)

(b) Explain how Bohr's model of the atom addresses the two main failures of Rutherford's model. (07 marks)

(c)The energy levels of the hydrogen atom are given by; $E_n = \frac{-13.6}{n^2} ev$. The hydrogen atom in its ground state is excited by means of a monochromatic radiation of wavelength 9.706×10^{-8}m.

(i) Calculate the ionisation energy of hydrogen in Joules. (02 marks)

(ii) Find the maximum possible number of energy levels on the resulting emission spectrum. (04 marks)

(iii) Find the longest wavelength among these and state the part of the spectrum in which it lies. (03 marks)

CamScanner

(d) Define the following;

(i) Ionisation energy. (01 mark)

(ii) Line spectrum. (01 mark)

10. (a) What is meant by;

(i) Unified atomic mass unit? (01 mark)

(ii) Decay constant. (01 mark)

(b) (i) Draw a countrate – voltage characteristic for a Geiger – muller tube and explain its main features. (04 marks)

(ii) With aid of a diagram, describe how a Geiger – muller tube is used to detect ionising radiation. (06 marks)

(c) Explain how energy is released in a nuclear fusion process. (03 marks)

(d) A radio isotope, $^{246}_{80}R$ of half-life **70** hours decays emitting **two** alpha particles, **three** beta particles and element **T**.

(i) Write a balanced equation for the decay. (01 mark)

(ii) Find the amount of energy released by **5 x 10^{-8}kg** of **R** after 2 days. (04 marks)

Given.

Mass of **R** = 246.00192 U

Mass of **T** = 237.90172 U.

Mass of alpha particle = 4.0014 U.

Mass of electron = 0.00055 U.

END

CamScanner

P510/2

Physics

Paper 2

July – August 2025

2 ½ Hours

UGANDA MUSLIM TEACHERS' ASSOCIATION

UMTA JOINT MOCK EXAMINATIONS – 2025

UGANDA ADVANCED CERTIFICATE OF EDUCATION

Physics

Paper 2

2 Hours 30 Minutes

INSTRUCTIONS TO CANDIDATES:

- *Answer only* **five** *questions, including at least* **one** *question but* ***not*** *more than* **two** *questions from each of the sections* ***A, B, C*** *and* ***D.***
- *Any additional question(s) answered will* ***not*** *be marked.*
- *Mathematical tables and squared paper will be provided where need be.*
- *Non-programmable scientific calculators* ***may*** *be used.*
- *Begin each question on a* ***fresh page*** *of the answer sheets / booklet provided.*

Assume where necessary.

• *Acceleration due to gravity*	g	=	$9.81ms^{-2}$
• *Speed of light in vacuum*	c	=	$3.0 \times 10^{8}\ ms^{-1}$
• *Electron charge*	e	=	$1.6 \times 10^{-19}C$
• *Speed of sound in air*		=	$330ms^{-1}$
• *Electron mass*	m_e	=	$9.11 \times 10^{-31}kg$
• *Permeability of free space*	μ_0	=	$4\pi \times 10^{-7}\ Hm^{-1}$
• *Permittivity of free space*	ε_0	=	$8.85 \times 10^{-12}Fm^{-1}$
• *One electron volt*	(eV)	=	$1.6 \times 10^{-19}\ J$
• *The constant*	$\frac{1}{4\pi\varepsilon_0}$	=	$9.0 \times 10^{9}F^{-1}m$

CamScanner

SECTION A

1. (a) (i) State what is meant by **reflection of light** and **refractive index** of a material? (02 marks)

(ii) A glass tank of depth $2y$ is half filled with a liquid of refractive index n_1 and the remaining half is filled with a liquid of refractive index n_2. Show that the apparent position of the scratch made at the bottom of the tank when viewed directly from above is given by

$$x = \frac{y}{n_1 n_2}(n_1 + n_2)$$ (04 marks)

(b) Explain how light from the sun reaches an observer in the morning before the sun appears above the horizon. (03 marks)

(c) **Figure 1** shows a ray of light is incident at an angle of 60° on one face of the prism of refracting angle 30°. The ray emerging out of the prism makes an angle of 30° with the incident ray.

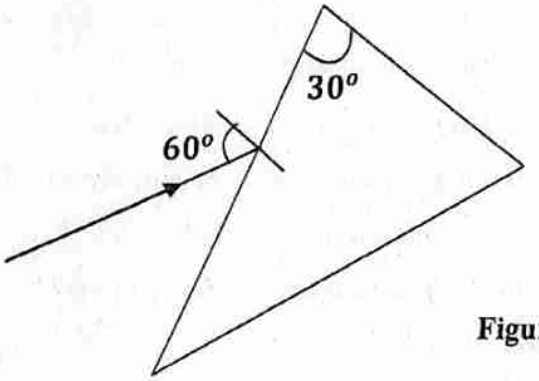

Figure 1

(i) Show that the emergent ray is perpendicular to the face through which it emerges. (02 marks)

(ii) Calculate the refractive index of the material of the prism. (02 marks)

(d) Explain why there is a reduction in the intensity of the image of a point object placed infront of a thick plane mirror. (03 marks)

(e) In an experiment to determine the refractive index of paraffin, a convex lens was placed on a horizontal plane mirror facing up. A pin is viewed from above coincided with its image at a height of **15cm** above the mirror. When water of refractive index $4/3$ was interposed between the lens and the mirror the pin coincided with its image at

© UMTA Joint Mocks 2025

a height of **18.7cm** while when paraffin was used instead of water coincidence occurred **20.0cm** above the mirror. Find the refractive index of paraffin. (04 marks)

2. (a) (i) Define **focal length** of a diverging lens. (01 mark)

(ii) Show that the effective focal length, F of a thin converging lens and a thin diverging lens in contact is given by;

$$\frac{1}{F} = \frac{1}{f_1} + \frac{1}{f_2}$$

where f_1 and f_2 are the focal lengths of the individual lenses respectively. (04 marks)

(b) A converging meniscus made out of a material of refractive index $3/2$ is clamped horizontally with its concave surface facing upwards. The inner side of the lens is filled to the brim with a transparent liquid of refractive index $4/3$. The meniscus has curved surfaces of radii of curvature **10cm** and **15cm** respectively. A lamp hangs **30cm** above the liquid surface. Find how far below the lens system, the image of the lamp is. (04 marks)

(c) (i) What is meant by the statement '**an astronomical telescope is in normal adjustment**'? (01 mark)

(ii) With aid of a ray diagram, describe the action of an astronomical telescope in normal adjustment. (05 marks)

(d) An astronomical telescope consists of two thin converging lenses of focal length **250cm** and **20cm** respectively. If the objective lens is of diameter **12cm** and the instrument is used while in normal adjustment, find the diameter of the eye ring. (03 marks)

(e) State **one** advantage and **one** disadvantage when using a microscope set so that the final image is at infinity. (02 marks)

CamScanner

SECTION B

3. (a) (i) Define **frequency** and **wave front** in relation to a wave. (02 marks)

(ii) Sketch a diagram to show how plane wavefronts incident on a concave mirror are reflected. (01 mark)

(iii) **Two** progressive waves are given by the equations; $y_1 = 2\sin\frac{5\pi}{6}(t - 3x)$ and $y_1 = 9\sin\frac{5\pi}{6}(2t - 3x)$. State the differences and similarities between the **two** waves. (02 marks)

(b) Explain how sound waves travel in air. (02 marks)

(c) A string of length **50cm** and area of cross section **450cm²** such that the tension in the string is **200N** to produce sound of frequency **400Hz**. Determine the;

(i) Mode of vibration of the string. (02 marks)

(ii) Density of the material of the string. (03 marks)

(d) Describe how you can determine the frequency of a note produced by a guitar and a tuning fork of known frequency. (04 marks)

(e) An audio signal generator of frequency **750Hz** is sounded together with a tuning fork of frequency **f** and beats of frequency **5Hz** are heard. When **one** of the prongs of the tuning fork is loaded with a small plasticine, beat frequency increased by **3Hz**. Determine the frequency of the tuning fork when it is loaded. (04 marks)

4. (a) What is meant by the following?

(i) Constructive interference. (01 mark)

(ii) Interference of waves. (01 mark)

(b)(i) Explain how interference fringes are formed in an air wedge. (04 marks)

(ii) **Two** glass slides are separated by a razorblade to form air wedge. When the wedge is illuminated normally by light of wavelength 5.4×10^{-7} **m**, a total of **20** fringes occupying a distance of **15mm** are obtained. Calculate the angle of the wedge. (03 marks)

(c) **Two** slits **A** and **B** are separated by a distance a, and illuminated with light of wavelength λ. Derive the expression for the separation between the successive fringes on a screen placed a distance d from the slits. (04 marks)

CamScanner

6. (a) Distinguish between **self-induction** and **mutual induction.** (02 marks)

(b) An iron-cored coil is connected as shown in the circuit in **figure 2.**

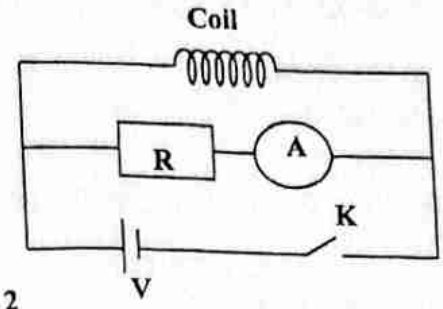

Figure 2

Explain what happens to the reading of the Ammeter, **A**, when the switch **K** is

(i) first closed. (03 marks)

(ii) opened. (02 marks)

(c) (i) Show that the induced **emf** in a moving metal rod in a magnetic field is due to magnetic force acting on the charge carriers inside the rod. (03 marks)

(ii) A small fan with three blades each of length **15.0 cm** suspended in at the center of the ceiling in a room rotates at **2400** revolutions per minute. The earth's magnetic field of flux density **5.6×10^{-5} T** is applied perpendicular to the to the plane in which the blades rotate. Determine the total **e.m.f** induced in the fan. (03 marks)

(d) Explain briefly how a moving coil galvanometer can be modified to measure charge. (03 marks)

(e) A ballistic galvanometer of resistance **10Ω** and sensitivity **5.6 div/μC** is connected in series with the resistor of **80Ω** and a secondary coil of **500** turns and **50Ω**. This coil is wound around the middle of a solenoid of radius **3.6 cm** having **10** turns per **cm** and carrying a current of **0.65A**. Calculate the deflection produced in the galvanometer when the current in the solenoid is switched off. (04 marks)

7. (a) Define Root-mean-square value as applied to voltage in alternating current circuits. (01 mark)

(b) (i) Distinguish between **electrical resistance** and **reactance** of an ac circuit. (02 marks)

CamScanner

(d) (i) Distinguish between **transmission grating** and **reflection grating**. (02 marks)

(ii) Sodium light of wavelength **589 nm** falls normally on a diffraction grating which has **600 lines per mm**. Calculate the angle between the direction in which the **first** order maxima on the same side of the straight through position are observed. (03 marks)

(e) State any **two** necessary conditions for observing interference patterns. (02 marks)

SECTION C

5. (a) (i) Define magnetic flux density. (01 mark)

(ii) Using a current balance, describe an experiment that investigates how increasing current through a conductor affects the force it experiences while positioned perpendicular to a magnetic field. (05 marks)

(b) (i) Define **magnetic meridian** and **angle of Dip** as applied to the earth's magnetism. (02 marks)

(ii) A circular coil of 4 turns and diameter **11.0 cm** carries a current of **0.35A**. It is placed with its plane in the magnetic meridian. Calculate the direction and magnitude of the resultant magnetic flux density at a position where the horizontal component of the earth's magnetic flux density is **1.8×10^{-6} T.** (04 marks)

(c) A horizontal strip of aluminium of thickness **d**, carries current **I**, and is situated in a vertical magnetic field of flux density **B**.

(i) Explain the existence of a potential difference across the strip. (03 marks)

(ii) If the number **per m^3** of the free electrons, each of charge, e coulombs in the strip is **N**, show that the potential difference, V_H in **(c) (i)** is given by,

$$V_H = \frac{IB}{eNd}$$ (03 marks)

(d) Explain why a charged particle moving in a uniform magnetic field describes a circular path. (02 marks)

CamScanner

(ii) A capacitor with capacitance $8 \times 10^{-7} F$ is connected to a sinusoidal voltage of angular frequency $6x10^{-3} rad/s$ with peak-to-peak value of **0.4V**. Find the current in the circuit. (03 marks)

(c) **Figure 3** below shows two circuit in which an ammeter **A** and a capacitor **C** are connected in **a.c** and **d.c** supply.

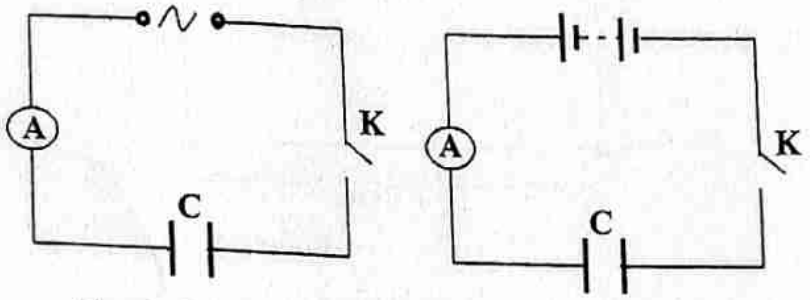

Figure 3

Explain what is observed in each circuit when switch **K** is closed. (04 marks)

(d) A pure inductor of inductance $0.04VA^{-1}$ is connected across a source which produces a sinusoidal current of $I = 5 \sin 120\pi t$ amperes.

(i) What is meant by a pure inductor? (01 mark)

(ii) Find the instantaneous back emf in the coil. (02 marks)

(iii) Determine the **r.m.s** value of voltatge across the inductor. (02 marks)

(e) With the aid of a labeled diagram, describe how alternating current is measured using a a hot wire type meter. (05 marks)

SECTION D

8. (a) (i) Define electric potential difference and electric field strength. (02 marks)

(ii) **Two** points **A** and **B** situated in an electric field have electric potentials V_A and V_B respectively. Show that the potential difference between the points **A** and **B** is given by $V_{AB} = V_A - V_B$. (03 marks)

(b) Explain why the flame of a candle tends to bend when placed near a pin connected to the charged dome of a Van de Graff generator. (03 marks)

CamScanner

(c) In the **figure 4**, point charges of $+6.0\mu C$, $+2.0\mu C$, and $-5.0\mu C$ are placed at the corners A, B and D respectively of a rectangle ABCD.

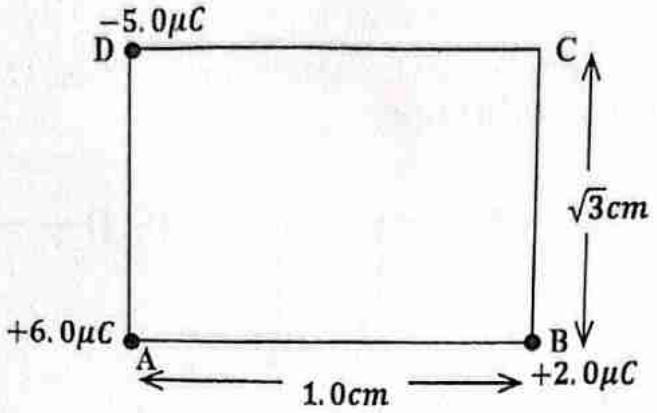

Figure 4

Calculate the work done in moving a charge of $+1.0nC$ from C to a point where the diagonals of the rectangle meet. (05 marks)

(d) Describe an experiment to show that the total charge inside a hollow conductor of any shape is zero. (05 marks)

(e) Explain what is meant by electrostatic shielding? (02 marks)

9. (a) Define the terms

(i) Capacitance of a capacitor. (01 mark)

(ii) Dielectric strength. (01 mark)

(b) Two identical parallel plate capacitors are connected in series with a battery of **e.m.f**, V_o volts. A dielectric material of relative permittivity ε_r is placed in one of the capacitors. Show that the potential difference, V_r across a capacitor with the dielectric material is given by $V_r = \frac{V_o}{1+\varepsilon_r}$. (04 marks)

(c) A battery of e.m.f **100V** is connected to a network of capacitors as shown in **figure 5.**

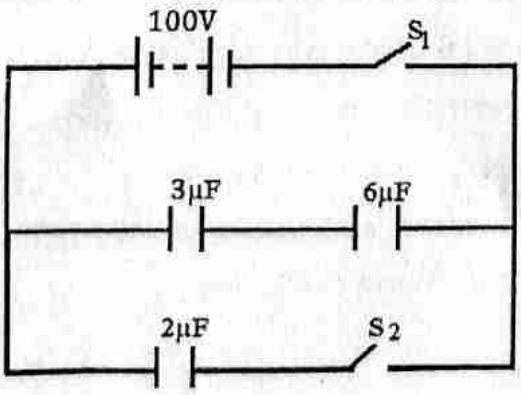

Figure 5

(i) If S_2 is left open and S_1 is closed, find the energy stored by the **3μF** capacitor. (04 marks)

(ii) If S_1 is now opened and S_2 closed, calculate the quantity of charge acquired by the **2μF** capacitor. (03 marks)

(d) Describe how you would use a ballistic galvanometer to investigate the variation of the capacitance of the parallel plate capacitor with distance between its plates. (04 marks)

(e) When a charged material is brought near an insulator and conductor, it only attracts a conductor. Explain the observation. (03 marks)

10. (a) Define **terminal p.d** of a battery. (01 mark)

(b) A battery of e.m.f, **E** and internal resistance, $\boldsymbol{r}$ is connected to a constant resistance, $\boldsymbol{R_o}$

(i) Show that $\frac{E-V}{V} = \frac{r}{R_o}$, where V is the p.d set up across the resistor when current flows (03 marks)

(ii) The constant resistance is replaced with a variable resistor, **R** and **E=10V**. If $r = 1.2\Omega$, find the maximum value of power dissipated. (02 marks)

(iii) Draw a sketch graph to show the variation of terminal p.d with changing values of **R**. Explain the shape of the graph. (02 marks)

(c) Define **electrical resistivity** and **temperature coefficient of resistance**. (02 marks)

© UMTA Joint Mocks 2025

CamScanner

(d) In an experiment to determine the temperature coefficient of resistance of a wire using a metre bridge, a graph of resistance **R** against temperature, $\boldsymbol{\theta}$ was plotted as shown in **figure 6**

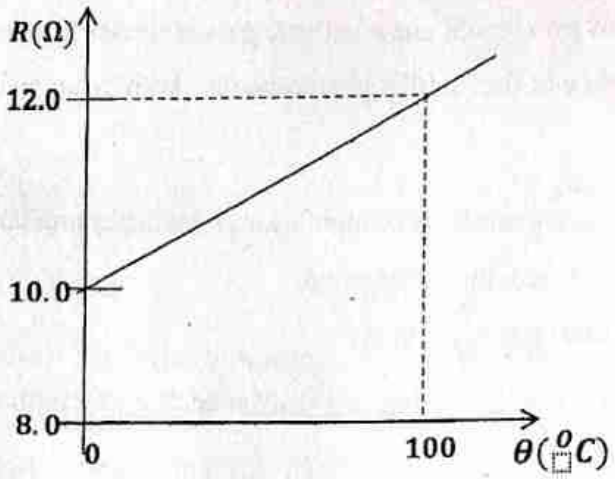

Figure 6

(i) Determine the temperature coefficient of resistance of the wire. (03 marks)

(ii) Explain how the shape of the graph reflects the sign and behavior of the temperature coefficient of resistance of the wire. (02 marks)

(e) Describe how a faulty voltmeter can be calibrated using a potentiometer. (05 marks)

END

CamScanner

P510/3
Physics Practical
July – August 2025
3 ¼ Hours

UGANDA MUSLIM TEACHERS' ASSOCIATION

UMTA JOINT MOCK EXAMINATIONS – 2025

UGANDA ADVANCED CERTIFICATE OF EDUCATION

Physics

Paper 3

3 Hours 15 Minutes

INSTRUCTIONS TO CANDIDATES:

- *Answer* **Question 1** *and* **one** *other question.*
- *For* ***each*** *question, candidates will be required to select suitable apparatus from the equipments provided.*
- *Any additional question answered will* ***not*** *be marked.*
- *Candidates are* ***not*** *allowed to use the apparatus for the first fifteen minutes.*
- *Squared paper is provided.*
- *Mathematical tables and non-programmable scientific electronic calculator may be used.*
- *Candidates are expected to record on their scripts in* ***blue*** *or* ***black ink*** *all their observations as these observations are made and to plan for the presentation of the records so that it is not necessary to make a fair copy of them. The working of the answers is to be handed in. Any pencil work will not be marked.*
- *Details on the question paper should* ***not*** *be repeated in the answers, nor is the theory of the experiment required unless specifically asked for. However, candidates should record any special precautions they have taken and any particular feature of the method of going about the experiment.*
- *Marks are given mainly for a clear record of observations actually made, for their suitability, and for the use made of them.*
- *Acceleration due to gravity* $g = 9.81ms^{-1}$

© UMTA Joint Mocks 2025

CamScanner

1. In this experiment, you will determine the constant, g of the earth's pull and the constant, k of the spiral spring provided. (40 marks)

PART I

(a) Set up the apparatus as shown in **figure 1**, making sure the pointer is horizontal.

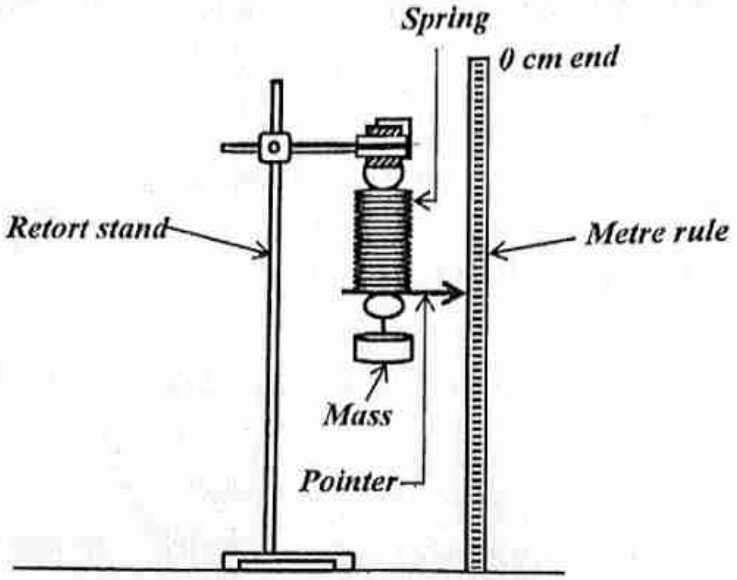

Fig. 1

(b) Read and record the initial pointer position, P_0 against the scale of a vertical metre rule.

(c) Suspend a mass $m = 0.100$ **kg** from the lower hook of the spring.

(d) Read and record the new pointer position, P_1.

(e) Determine the extension, $e = (P_1 - P_0)$ of the spring.

(f) Pull the mass m slightly downwards and release it to oscillate.

(g) Measure and record the time, t for **20** oscillations, and hence, determine the periodic time, T for the oscillations.

(h) Repeat procedures **(c)** to **(g)** for other values of m = **0.200, 0.300, 0.400, 0.500** and **0.600 kg**.

(i) Tabulate your results including values of T^2.

(j) Plot a graph of T^2 against e.

© UMTA Joint Mocks 2025

CamScanner

(k) Find the slope, S of the graph.

(l) Calculate the value of g from the expression:

$$g = \frac{4\pi^2}{S}$$

PART II

(a) Suspend a mass m = **0.250kg** from the lower hook of the spring used in **figure 1** above.

(b) Pull the mass m slightly downwards and release it to oscillate.

(c) Measure and record the time, t_1 for **20** oscillations, and hence, determine the periodic time, T_1 for the oscillations.

(d) Calculate the value of k from the expression:

$$k = \frac{mgS}{T_1^{\,2}}$$

(e) State **one** source of error that could have affected the accuracy of your value of k.

2. In this experiment, you will determine the constant, f of the converging lens provided. **(40 marks)**

METHOD I

(a) Mount the lens labelled on a holder and focus a distant object outside the window onto the screen.

(b) Measure and record the distance, d_1 between the screen and the lens.

(c) Arrange the bulb. lens, and the screen in a straight line as shown in **figure 2.**

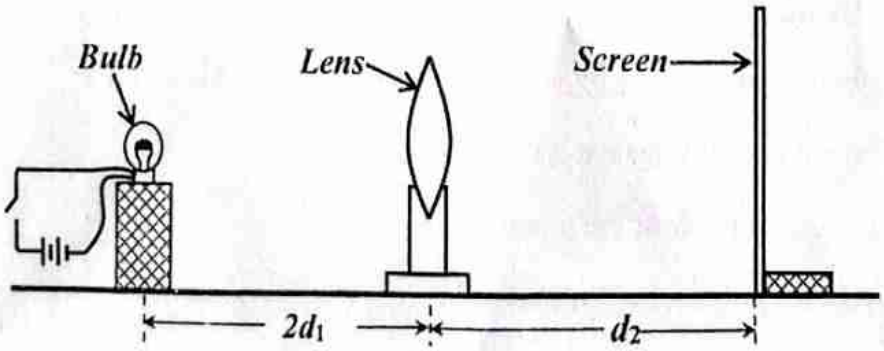

Fig.2

CamScanner

(d) Adjust the distance between the bulb and the lens to $2d_1$.

(e) Move the screen until a sharp image of the bulb's lit filament is formed on the screen.

(f) Measure and record distance, d_2 between the lens and the screen.

(g) Calculate f_1 from the expression:

$$f_1 = \frac{d_1}{2} + \frac{d_2}{4}$$

METHOD II

(a) Arrange the bulb, lens, and the screen in a straight line as shown in figure 3.

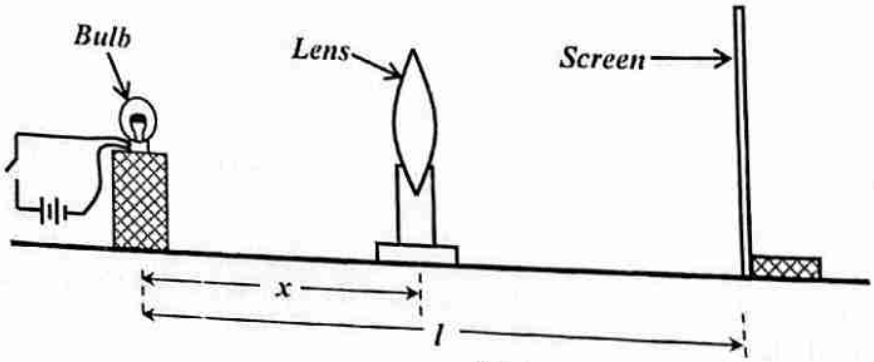

Fig.3

(b) Adjust the distance, x between the bulb and the lens to **30.0 cm.**

(c) Move the screen until a sharp image of the bulb's lit filament is formed on the screen.

(d) Measure and record distance, l between the bulb and the screen.

(e) Repeat procedures **(b)** to **(d)** for values of x = **40.0, 50.0, 60.0, 70.0** and **80.0cm.**

(f) Tabulate your results including values of $y = (l - x)$, and xy

(g) Plot a graph of l against xy.

(h) Find the slope, S of the graph.

(i) Calculate f_2 from the expression:

$$f_2 = \frac{1}{S}$$

(j) Determine the average value, f of f_1 and f_2.

(k) Comment on your value of f.

© UMTA Joint Mocks 2025

CamScanner

3. **In this experiment you will determine the constant, k of the bare wire labelled W, provided using two methods.** (40 marks)

METHOD I

(a) Fix the bare wire labelled **W** on the table surface using sellotape or masking tape and connect the circuit shown in **figure 4** with the length between **X** and **Y** equal to x_1 = **40.0 cm.**

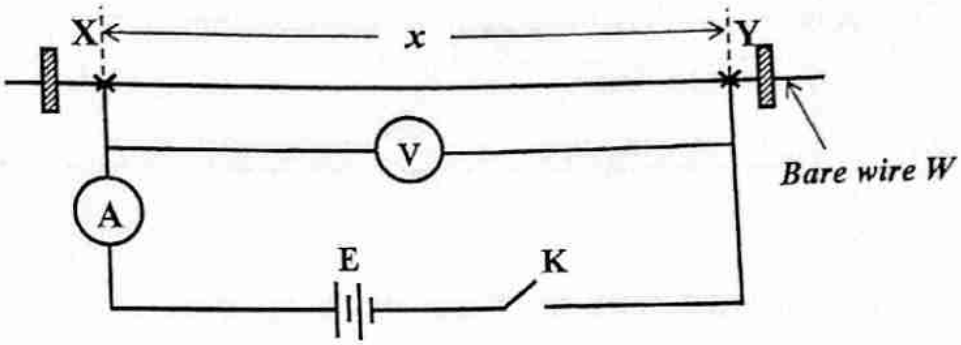

Fig. 4

(b) Close the switch **K.**

(c) Read and record the ammeter reading, I_1 and the voltmeter reading, V_1.

(d) Open the switch **K.**

(e) Adjust the length between **X** and **Y** to x_2 = **80.0 cm.**

(f) Close the switch **K.**

(g) Read and record the new ammeter reading, I_2 and the new voltmeter reading, V_2.

(h) Open the switch **K.**

(i) Calculate k_1 from the expression:

$$k_1 = \frac{1}{2}\left(\frac{V_1}{I_1 x_1} + \frac{V_2}{I_2 x_2}\right)$$

CamScanner

METHOD II

(a) Set up the circuit in **figure 5** with the bare wire W connected as shown.

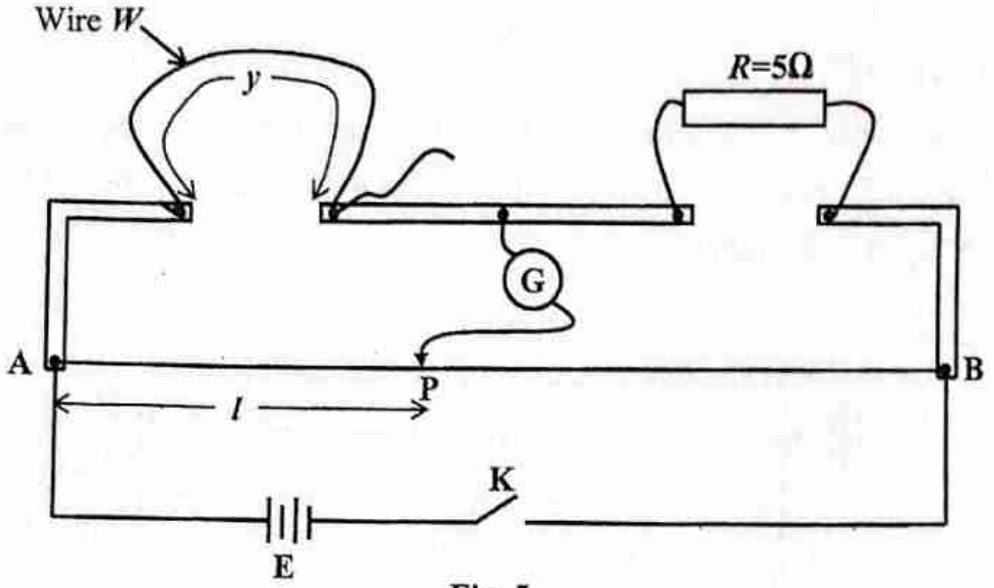

Fig. 5

(b) Adjust the length of the wire W to y = **0.200 m.**

(c) Close switch **K** and locate the point **P** on the metre bridge wire **AB** for which the galvanometer shows no deflection.

(d) Measure and record the balance length, l in **metres.**

(e) Open the switch **K.**

(f) Repeat procedures **(b)** to **(e)** for values of y = **0.300, 0.400, 0.500, 0.600** and **0.700 m.**

(g) Tabulate your results including the values of $\frac{1}{y}$ and $\frac{1}{l}$

(h) Plot a graph of $\frac{1}{y}$ against $\frac{1}{l}$

(i) Determine the slope, S of the graph.

(j) Calculate the value of k_2 from the expression:

$$k_2 = RS$$

(k) Calculate the value of k from the expression;

$$k = \frac{1}{2}(k_1 + k_2)$$

(l) State **two** precautions that you undertook to minimize errors in the experimental results.

END

CamScanner